Moisture meter

Operating Manual

LF-TD 90

Air humidity transmitter series

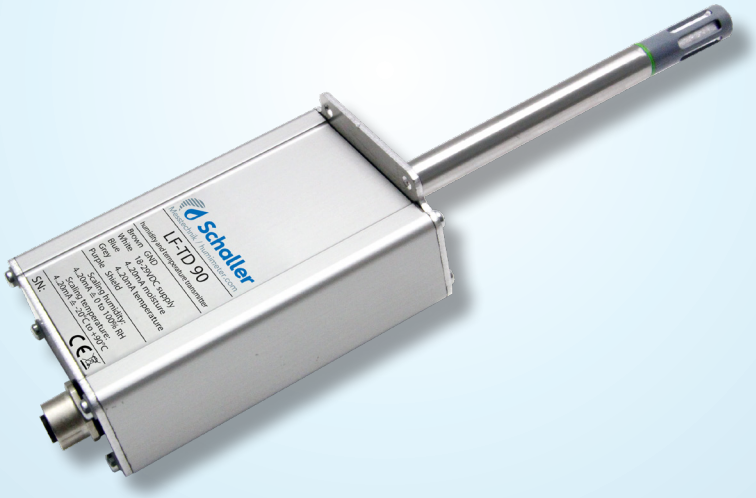

78,0 °F | 6,16% | 456 kg/m³ | −27,3 td | 0,64 aw | 51,9 %r.H. | 14,8 %abs | 100,4 g/m² | 09 m/s | 4,90 Ugl | 1

Version 2.7

Always read this operating manual before using the LF-TD 90!

Your LF-TD 90 at a glance

The main unit

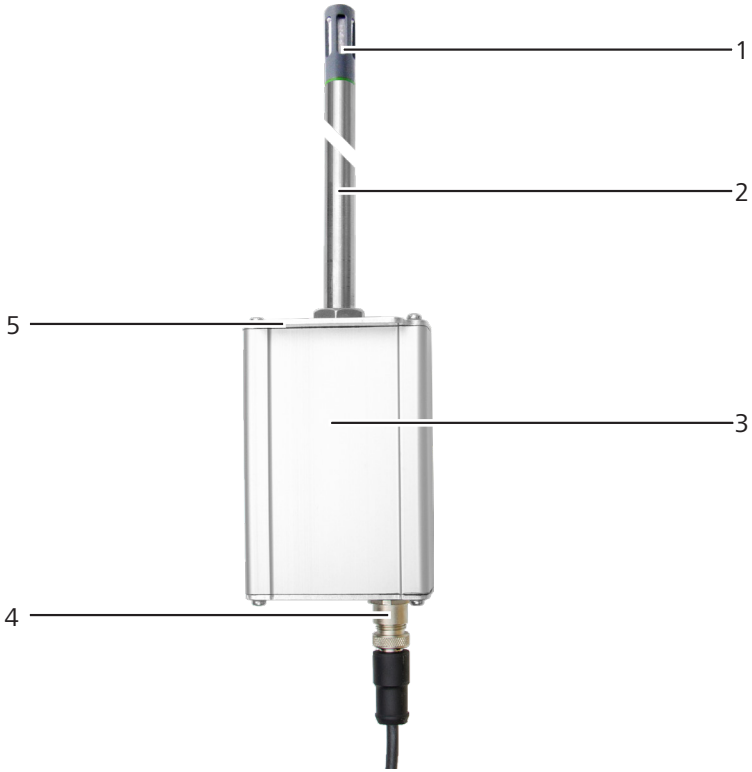

No.	Name
1	Air humidity and temperature sensor
2	Sensor tube
3	Aluminium housing
4	Sensor plug
5	Mounting bracket

Table of contents

Your LF-TD 90 at a glance 2
The main unit 2
1. Introduction 5
1.1 Information about this operating manual 5
1.2 Limitation of liability 5
1.3 Symbols used in this manual 6
1.4 Customer service 6
2. For your safety 7
2.1 Proper use 7
2.2 Improper use 7
2.3 User qualifications 7
2.4 General safety information 8
2.5 Warranty 8
3. On receipt of your device 8
3.1 Taking the device out of its packaging 8
3.2 Making sure that all of the components have been included 8
3.2.1 Scope of supply 9
4. Installation of the transmitter 9
4.1 Laying of the supply line or transmission line 9
4.2 Mounting the transmitter 10
4.3 Pin assignment 11
4.4 Wiring diagram 11
5. Technical drawing LF-TD 90 12
6. Adjustment behaviour of the sensor 12
7. Definition relative humidity 13
7.1 Application range 13
8. Cleaning and maintenance 14
8.1 Care instructions 14
8.2 Cleaning the device 14
9. Checking the calibration 15
9.1 Assembling the calibration equipment 15
9.2 Determining the deviation 16
10. Faults 17

11. Repair 18
12. Storage and disposal 18
12.1 Storing the device 18
12.2 Disposing of the device 18
13. Device information 19
13.1 EC declaration of conformity 19
13.2 Technical data 23

1. Introduction

1.1 Information about this operating manual

This operating manual is designed to enable you to use the LF-TD 90 safely and effectively. It is part of the device, has to be stored nearby and must be easily accessible to users at all times.

All users are required to carefully read and make sure that they have understood this operating manual before using the LF-TD 90. All of the safety and operating instructions detailed in this manual have to be observed to ensure the safety of the device.

1.2 Limitation of liability

All of the information and instructions provided in this operating manual have been compiled on the basis of the current standards and regulations, the state of the art, and the extensive expertise and experience of Schaller Messtechnik GmbH.

Schaller Messtechnik GmbH does not accept any liability for damage associated with the following, which also voids the warranty:

- Non-observance of this operating manual
- Improper use
- Inadequately qualified users
- Unauthorised modifications
- Technical changes
- Use of unapproved spare parts

This fast measuring procedure can be affected by a range of different factors.

We, as the manufacturer, do not accept any liability for any incorrect measurements and associated consequential damage.

1.3 Symbols used in this manual

All of the safety information provided in this manual is shown with a corresponding symbol.

ATTENTION

It is essential to observe this warning. Non-compliance can lead to damage to property or equipment.

Information

This symbol indicates important information that enables users to use the device more efficiently and cost-effectively.

1.4 Customer service

For technical advice, please contact our customer service department at:

Schaller Messtechnik GmbH
Max-Schaller-Straße 99
A - 8181 St.Ruprecht an der Raab

Telephone: +43 (0)3178 28899
Fax: +43 (0)3178 28899 - 901

E-mail: info@humimeter.com
Internet: www.humimeter.com

© Schaller Messtechnik GmbH 2026

Information

Your purchased measuring instrument can be calibrated, and the adjustment checked by using suitable test ampoules / calibration ampoules. For this purpose, use only the calibration solutions distributed by Schaller Messtechnik Gmbh. You can download a calibration certificate for your test ampoules / calibration ampoules with the batch number printed on the ampoul fromhttps://www.humimeter.com/certificates/.

2. For your safety

The device complies with the following European directives:

- Restriction of Hazardous Substances in Electrical and Electronic Equipment (RoHS)
- Electromagnetic compatibility (EMC)

The device corresponds to state-of-the-art technology. However, it is still associated with a number of residual hazards.

These hazards can be avoided through strict observance of our safety information.

2.1 Proper use

- Transducer for measuring and transmitting relative humidity and temperature in fixed installation
- The sensor technology used makes it possible to detect even small fluctuations in humidity and their tendencies quickly and reliably so that preventive actions can be taken.
- For some applications (e.g. installation in sewage pipes) it is necessary to use a remote measuring probe for the reason of temperature adjustment.

2.2 Improper use

- The device must not be used in ATEX.

2.3 User qualifications

The device must only be operated by people who can be expected to reliably take the measurements. The device must not be operated by people whose reaction times may be slowed due to, e.g. the use of drugs, alcohol or medication.

All persons using this device must have read, understood and follow the instructions provided in the operating manual.

2.4 General safety information

The following safety information has to be observed at all times to avoid damage to objects and injury to people:

- In case of damages or loose parts on the device, contact Schaller Messtechnik GmbH or your dealer.

All of the device's technical features have been inspected and tested before delivery. Every device has a serial number. Do not remove the tag with the serial number.

2.5 Warranty

The warranty does not apply to:

- Damage resulting from non-observance of the operating manual
- Damage resulting from third-party interventions
- Products that have been used improperly or modified without authorisation
- Products with missing or damaged warranty seals
- Damage resulting from force majeure, natural disasters, etc.
- Damage from improper cleaning

3. On receipt of your device

3.1 Taking the device out of its packaging

- Take the device out of its packaging.
- Next, make sure that it is not damaged and that no parts are missing.

3.2 Making sure that all of the components have been included

Make sure that all of the components have been included by checking the package contents against the following list:

3.2.1 Scope of supply

- LF-TD 90
- Connecting cable of 1.9 m length
- Operating manual

Optional accessories:

- Display for LF-TD
- Display with keypad for LF-TD
- Relay output for moisture for LF-TD
- Mounting bracket for LF-TD
- Stainless steel sinter sensor cap
- Brass sinter sensor cap
- Drip-catcher for LF-TD
- Stainless steel lattice filter
- RS232 interface - described in a separate operating manual
- USB interface - described in a separate operating manual
- Profinet interface - described in a separate operating manual
- Ethernet interface - described in a separate operating manual
- Modbus interface - described in a separate operating manual
- Custom-made design - flat rate for air humidity transmitter series per order
- Factory calibration certificate, calibration equipment, certified calibration ampoules and reference devices - for continuous monitoring

4. Installation of the transmitter

4.1 Laying of the supply line or transmission line

- The cable must not be laid in the area of interference fields.
- Do not operate the transmitter in the area of electromagnetic interference fields.
- The permissible cross-sections for the installation must be observed.
- The cable length must be kept as short as possible.

» If an extension of the cable is required, the cross-section of the extension must not be below 0.25 mm^2.

- If the electronics housing and the display electronics are grounded, an appropriate equipotential bonding conductor must be provided.

4.2 Mounting the transmitter

- The measuring probe must be positioned at a representative location.
- » Avoid positions of draught and unnatural temperature fluctuations.
- » Do not expose the device to direct sunlight.

- If the sensor tube is twisted, the tightness is no longer guaranteed.
- When there is a possibility of condensation, position the sensor probe slightly upwards (approx. 10 degrees angle).
- » The condensation water can then flow away from the sensor probe towards the housing or cable and drain off.
- » If it is impossible to place the unit at an upward angle, a drip nose (optional accessory) must be installed.

- Installation inside an air duct (or at mounting locations where temperature differences between sensor probe and sensor housing may occur:
- » The sensor must be inserted fully into the opening until it stops, to avoid a temperature drop along the sensor tube. See sketch:

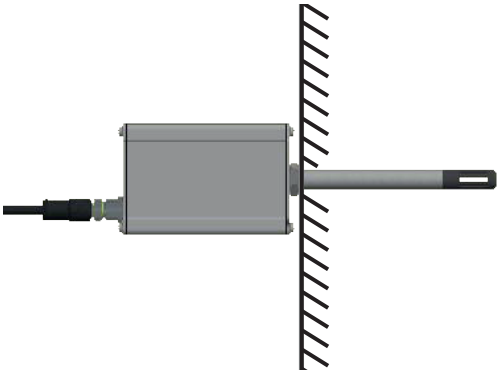

4.3 Pin assignment

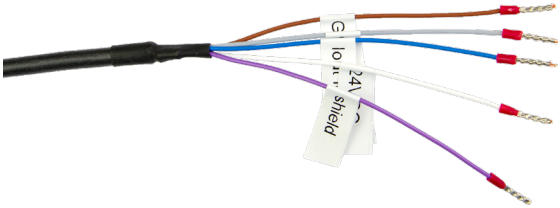

Cable color	Pin no.	Function
Brown	1	Power supply V- (0 VDC) Ground current output
White	2	Power supply V+ (12 to 29 VDC)
Blue	3	Analogue output humidity 4 - 20 mA
Black	4	n.c.
Grey	5	Analogue output temperature 4 - 20 mA
Purple	Housing	Equipotential bonding GND

ATTENTION

Damage to the electronics due to incorrect connected cables

Incorrect connected cables can lead to severe damage to the electronics.

► Connect all cables correctly.

4.4 Wiring diagram

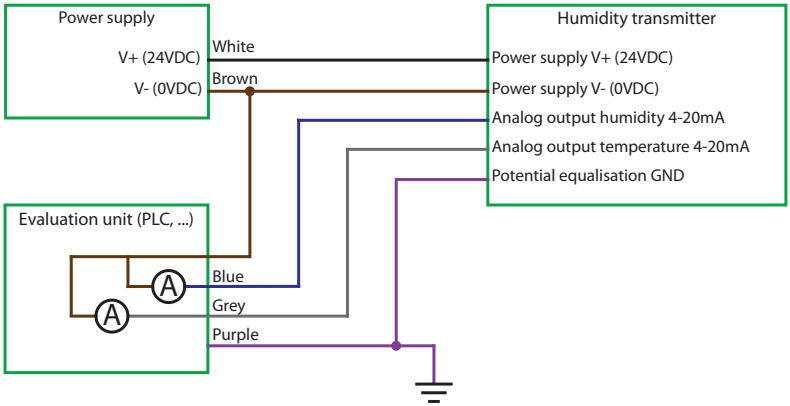

5. Technical drawing LF-TD 90

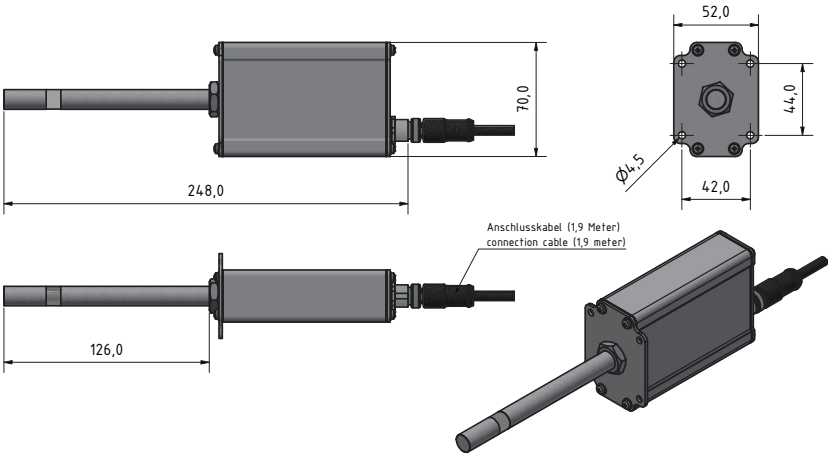

6. Adjustment behaviour of the sensor

In humidity and temperature measurement, several parameters are responsible for the adjustment behaviour (time until the actual measured value is displayed). The parameter responsible for the highest measuring error is a temperature discrepancy between the sensor resp. the whole measuring instrument and the material being measured resp. the air.

Therefore, let the device adjust until the displayed temperature corresponds to the actual temperature. The graph below shows how long it takes to adjust from 20 °C to 30 °C.

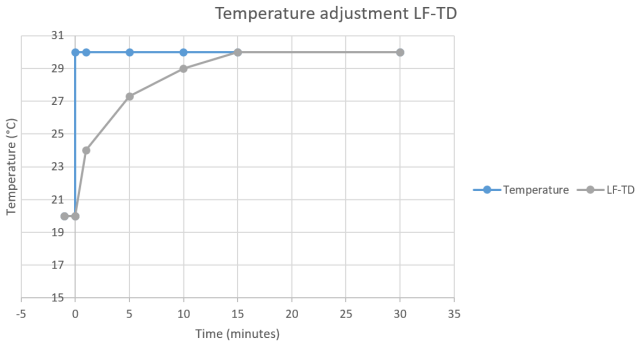

To demonstrate the importance of temperature adjustment, the table below shows the measuring errors due to a temperature difference between the measuring instrument and the material being measured of only 1 °C / 1.8 °F, at different ambient temperatures.

	10 °C (50 °F)	20 °C (68 °F)	30 °C (86 °F)
10 % r.h.	+/- 0.7 %	+/- 0.6 %	+/- 0.6 %
50 % r.h.	+/- 3.5 %	+/- 3.2 %	+/- 3.0 %
90 % r.h.	+/- 6.3 %	+/- 5.7 %	+/- 5.4 %

At room temperature (20 °C / 68 °F) and an assumed humidity value of 50 % relative humidity a temperature difference between the measuring sensor and the material being measured of 1 °C / 1.8 °F causes a measurement error of 3.2 % relative humidity. A temperature difference of 3 °C / 5.4 °F would cause a measurement error of more than 10 % relative humidity.

7. Definition relative humidity

Indicates the relationship between the current water vapour pressure and the maximum possible, the so-called saturation vapour pressure.

The relative humidity shows the degree the air is saturated with water vapour. Examples:

50% relative humidity: At the current temperature and pressure, the air is half saturated with water vapour. 100% relative humidity means that the air is totally saturated with water vapour. If the air has more than 100% humidity, the excessive humidity would condense or precipitate as mist.

7.1 Application range

Within the normal application range (normal range) the accuracy of the device is as indicated. A long-term application beyond the normal application range (max. range), particularly at an air humidity of more than 80%, can lead to higher measuring errors. Back in the normal application range, the sensor will return to the indicated accuracy automatically.

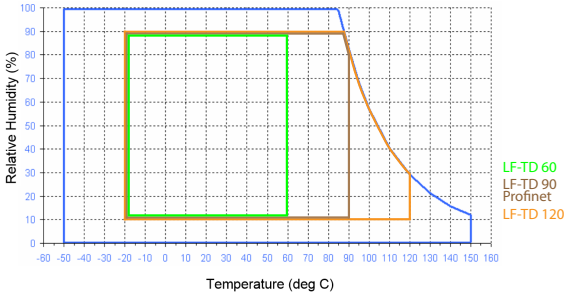

ATTENTION

In general, use is recommended at 1.013 bar ambient pressure.
Overpressure consultation is possible up to 5 bar overpressure. It is not guaranteed that the sensor will provide a complete seal to the ambient pressure at overpressure.

8. Cleaning and maintenance

Regularly cleaning and maintaining the device will ensure that it will have a long service life and stay in good condition.

8.1 Care instructions

- Do not leave the device out in the rain.
- Do not immerse the sensor in water.
- Do not expose the device to extreme temperatures.
- Protect the device from strong mechanical shocks and loads.

8.2 Cleaning the device

ATTENTION

Do not clean with fluids
Water or cleaning fluid getting inside the device can destroy the device.
► Only clean with dry materials.

Aluminium housing and sensor tube

Clean the aluminium housing and the sensor tube with a dry cloth.

Air humidity and temperature sensor

The air humidity and temperature sensor cannot be cleaned. In case of a polluted sensor please contact your dealer.

9. Checking the calibration

To do so: Calibration equipment (art.no.10006) and calibration ampoules (humidity standards art.no. 10005) required. The device, the calibration equipment and the humidity standards must have a temperature between 20.0 °C and 26.0 °C. It is recommended to store the device, the calibration equipment and the calibration ampoules in a room with little temperature fluctuation for 24 hours.

9.1 Assembling the calibration equipment

1. Place the sealing ring over the threads of the lower part like shown in figure 1.

2. Put the textile pad in the lower part (figure 2) and carefully pour the humidity standard onto the pad, beginning with the humidity standard of 35 % relative humidity.

3. Carefully place the upper part onto the lower part (figure 3) and tighten the upper part clockwise.

» Recommendation: Keep the lower part on the table while screwing on the upper part.

» If necessary, only lift the calibration equipment straight up and do not tilt or turn it over.

4. Loosen the fixing nut counterclockwise until the sensor tube of the measuring device can be inserted without excessive pressure.

5. Now carefully push the sensor tube of the measuring device into the upper part until it stops (figure 4).

6. Secure the calibration equipment on the sensor tube by tightening the previously loosened fixing nut.

» Make sure to lift the device with the calibration equipment only straight up and do not tip or turn it over Otherwise you could damage the sensor.

» Do not remove the calibration equipment from the sensor tube until specifically indicated otherwise.

» Place a distance holder under the device so that the device and the calibration equipment lay horizontally on the table.

ATTENTION

Damage to the sensor

By tilting or turning the device with mounted calibration equipment the sensor can be destroyed.

► Only lift the device with mounted calibration equipment straight up.

9.2 Determining the deviation

1. Let the sensor adjust to the humidity standard for at least 2 hours.
2. Then note down the measured relative humidity and temperature.
3. At ideal temperature conditions (device, calibration equipment and humidity standard have a temperature of 23 °C), the value printed on the humidity standard can be used as reference value.
4. In case of deviation from the factory temperature (23.0 °C), the real humidity value must first be determined according to the table below.

Temperature	Humidity standards		
	35 %	**50 %**	**80 %**
20 °C	34.6 %	49.8 %	79.9 %
21 °C	34.8 %	49.8 %	80.0 %
22 °C	34.9 %	49.9 %	80.0 %
23 °C	35.0 %	50.0 %	80.0 %
24 °C	35.1 %	50.1 %	80.0 %
25 °C	35.2 %	50.2 %	80.0 %
26 °C	35.4 %	50.2 %	80.1 %

5. Note down the real humidity value.
6. Compare the noted displayed measuring value with the real humidity value.

» If the deviation revealed is below 1.5 % relative humidity, it is not recommended to recalibrate.

» If the deviation revealed is more than 1.5 % relative humidity, please contact your dealer.

7. Now remove the calibration equipment from the sensor tube and repeat the procedure from "9.1 Assembling the calibration equipment", optionally with the humidity standard 50 % relative humidity or the humidity standard 80 % relative humidity.

10. Faults

If the measures listed below fail to remedy any faults or if the device has faults not listed here, please contact Schaller Messtechnik GmbH.

Fault	Cause	Remedy
Measuring error	The temperature is outside the operating temperature: lower than -20 °C or higher than +90 °C	Only use the device in temperatures between -20 °C and +90 °C.
	Measurement error due to too short temperature adjustment time	Let the device adjust to the surroundings (see "6. Adjustment behaviour of the sensor").
	Sources of heat or cold that do not correspond to the surrounding temperature	Reposition your device at a location that is representative for the room climate.
	Dripping water or sprayed water	Direct contact of the sensor with dripping or sprayed water will destroy it.
	Irreversible damage of the sensor due to aggressive gases	Please contact your dealer.
	Condensation caused by a change in temperature	Condensation on the sensor interferes with the calibration. Let the device adjust to the surrounding temperature.
	Polluted air humidity and temperature sensor	Please contact your dealer.
	Foreign particles on the sensor	Please contact your dealer.

11. Repair

If your humimeter needs repair, please pack it securely for transport and send it to:
Schaller GmbH
Max-Schaller-Straße 99
A - 8181 St.Ruprecht an der Raab

Download the repair form at humimeter.com/reparatur. Please fill out the form completely and enclose it with your package. This will allow us to clearly identify your repair request and process it quickly.

WARNING

For safety reasons, deeply discharged, damaged, or swollen rechargeable or non-rechargeable batteries are not allowed to be sent. Rechargeable and non-rechargeable batteries must be removed from the device before sending.

12. Storage and disposal

12.1 Storing the device

The device must be stored as follows:

- Do not store outdoors.
- Store in a dry and dust-free place.
- Protect the device from sunlight.
- Avoid mechanical shocks/loads.
- Storage temperature: -20 °C to +60 °C

12.2 Disposing of the device

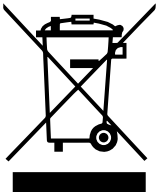

Devices marked with this symbol are subject to Directive 2012/19/EU of the European Parliament and of the Council of 4 July 2012 on waste electrical and electronic equipment (WEEE).
If the device is being operated outside the European Union, the national regulations on the disposal of such devices that apply in the country of use must be observed.Electronic devices must not be disposed of as domestic waste.The device must be disposed of appropriately using appropriate collection systems.

13. Device information

13.1 EC declaration of conformity

CE KONFORMITÄTSERKLÄRUNG
DECLARATION OF CONFORMITY

Name/ Adresse des Herstellers: *Name/ address of manufacturer:*	**Schaller Messtechnik GmbH** **Max-Schaller-Straße 99** **A – 8181 St. Ruprecht**
Produktbezeichnung: *Product designation:*	**Schaller**
Typenbezeichnung: *Type designation:*	**LF-TD-A ; LF-TD 60 ; LF-TD 90 ; LF-TD 120 ; LF-TD 150; LF-TD 180 ; LF-TD-E ; LF-TD-U ; LF-TD-ER ; LF-TD Profinet ; LF-TD-H**
Produktbeschreibung: *Product description*	**Messgerät zur Bestimmung der rel. Feuchte und abgeleiteter Messgrößen** ***Measuring instrument for determining relative humidity and derived measured variables***

Das bezeichnete Produkt erfüllt die Bestimmungen der Richtlinien:

The designated product is in conformity with the European directives:

EMV - Richtlinie 2014/30/EC	***EMC Directive 2014/30/EU***
RoHS - Richtlinie 2011/65/EG	***RoHS-Directive 2011/65/EU***

Die Übereinstimmung des bezeichneten Produktes mit den Bestimmungen der Richtlinien wird durch die vollständige Einhaltung folgender Normen nachgewiesen:

Full compliance with the standards listed below proves the conformity of the designated product with the provisions of the above-mentioned EC Directives:

EN 61326–1:2013	Elektrische Mess-, Steuer-, Regel- und Laborgeräte - EMV-Anforderungen *Electrical equipment for measurement, control, and laboratory use – EMC requirements*
EN IEC 63000:2019-05 *ersetzt / replaced* **EN 50581:2012**	Technische Dokumentation zur Beurteilung von Elektro- und Elektronikgeräten hinsichtlich der Beschränkung gefährliche Stoffe. *Technical documentation for the assessment of electrical and electronic products with respect to the restriction of hazardous substances.*

Für das angeführte Produkt ist eine vollständige Dokumentation mit Betriebsanleitung in Originalfassung vorhanden.

For the mentioned product a complete documentation with manual of instruction in original version is available.

Bei Änderungen, die nicht vom Hersteller spezifiziert sind, verliert diese Konformitätserklärung die Gültigkeit.

In case of any changes not agreed upon with the manufacturer, this declaration of conformity loses its validity.

St. Ruprecht a.d. Raab, 31.07.2022

Schaller
Messtechnik / humimeter.com
Schaller Messtechnik GmbH
Max - Schaller - Straße 99
AT - 8181 St.Ruprecht a. d. Raab
www.humimeter.com | info@humimeter.com

Bernhard Maunz
Rechtsverbindliche Unterschrift des Ausstellers
Legal binding signature of the issuer

DECLARATION OF CONFORMITY

Name/ address of manufacturer:	**Schaller Messtechnik GmbH** **Max-Schaller-Straße 99** **A – 8181 St. Ruprecht**
Product designation:	**Schaller**
Type designation:	**LF-TD-A ; LF-TD 60 ; LF-TD 90 ; LF-TD 120 ; LF-TD 150; LF-TD 180 ; LF-TD-E ; LF-TD-U ; LF-TD-ER ; LF-TD Profinet ; LF-TD-H**
Product description:	**Measuring instrument for determining relative humidity and derived measured variables**

The designated product is in conformity with the following directives:

- **Electromagnetic Compatibility Regulations 2016 Great Britain**
- **RoHS-Directive 2011/65/EU Directive on the restriction of the use of certain hazardous substances in electrical and electronic equipment**

Full compliance with the standards listed below proves the conformity of the designated product with the provisions of the above-mentioned Directives:

EN 61326–1:2013	Electrical equipment for measurement, control, and laboratory use – EMC requirements
EN IEC 63000:2019-05 replaced **EN 50581:2012**	Technical documentation for the assessment of electrical and electronic products with respect to the restriction of hazardous substances.

For the mentioned product, a complete documentation with manual of instruction in original version is available.

In case of any changes not agreed upon with the manufacturer, this declaration of conformity loses its validity.

St. Ruprecht a.d. Raab, 31.07.2022

Schaller
Messtechnik / humimeter.com
Schaller Messtechnik GmbH
Haus - Schaller - Straße 99
AT - 8181 St. Ruprecht a. d. Raab
www.humimeter.com | info@humimeter.com

Bernhard Maunz
Legal binding signature of the issuer

13.2 Technical data

Measuring range rel. air humidity	0 % to 100 %
Calibration rel. air humidity	10 % to 90 %
Accuracy rel. air humidity	+/- 2.0 % (at 25 °C)
Measuring range temperature	-20 °C to +90 °C
Calibration temperature	+10 °C to +60 °C
Accuracy temperature	+/- 0.3 °C (at 25 °C) / +/- 0.5 °F (at 77 °F)
Operating temperature	-20 °C to +90 °C (sensor tube) -20 °C to +85 °C (electronics)
Outputs	rel. air humidity (4 - 20 mA) -Scaling (0 % to 100 %) Temperature (4 - 20 mA) -Scaling (-20 °C to +90 °C) Working resistance < 500 Ohm (UB 24 V)
Temperature compensation	Automatic
Power supply	12 to 29 VDC
Current consumption	18 mA (without interfaces, display or any bus systems)
Electrical connection	Sensor plug with 1.9 m cable
Housing dimensions	70 x 32 x 120 mm
Housing material	Anodised aluminium
Sensor tube dimensions	12 x 125 mm
Sensor tube material	Stainless steel
Sensor cap	Plastic with filter paper
IP rating electronics housing	IP 54

Schaller Messtechnik develops, produces and sells professional moisture meters and turnkey solutions.

Schaller Messtechnik GmbH
Max-Schaller-Straße 99, A - 8181 St. Ruprecht an der Raab
Tel +43 (0)3178 - 28899 , Fax +43 (0)3178 - 28899 - 901
info@humimeter.com, www.humimeter.com